VTT TECHNICAL RESEARCH CENTRE OF FINLAND LTD

State of art in integrated bioenergy hybrids

Stepping up green impact with hybrid solutions

23rd November 2016

Elina Hakkarainen

Content

- Definition for integrated bioenergy hybrid
- Key findings in target countries
  - Technology development
  - Potential applications
- Summary of key findings

© Savosolar

Definition

© Savosolar

Definition for integrated bioenergy hybrid

- *"Process having at least two renewable energy inputs, of which one is bioenergy"*
- The definition for hybrid system challenging issue, since energy systems are becoming more complex

- Hybrid system classification in this work:
  1. Domestic applications
  2. Utility-scale applications and district heating and cooling networks
  3. Industrial applications
  4. Farm-scale applications

- Other classification could be used as well, e.g. the degree of dependency between components*
  - Light: Minimal shared equipment, no operational dependency; *bioenergy* + *wind*
  - Medium: Major shared equipment, some operational dependency; *bioenergy* + *solar thermal*
  - Strong: Major shared equipment, operational dependency; *bioenergy* + *geothermal*

*Source: Peterseim, J.H. et al., 2014, Concentrating solar power hybrid plants – Enabling cost effective synergies, Renewable Energy 67 (2014) 178-185

Key findings in target countries

Domestic applications

- Hybrids mainly found in the heating sector; bioenergy a natural source of heat
- Largest potential outside DH networks
- To replace oil and electric heating
- Flexible integration of different heat sources and robust operation
- In Germany, 60% of all pellet boilers and stoves combined with solar thermal
  - Growth foreseen also in Finland
- Investments market driven
- Household heating behavior
  1. Bioenergy for base demand
  2. Bioenergy for peak demand

© Ekolämmöx

- The main challenge: Selection of technologies and their proper dimensioning

Utility-scale applications and district heating and cooling networks

- District heating is typical form of heating in studied countries
- DH and DC networks are good base for renewable energy adoption
  - Waste heat recovery, heat pumps and solar thermal growing trends
- In Germany and Austria several demonstration projects for renewable district and regional heat grids

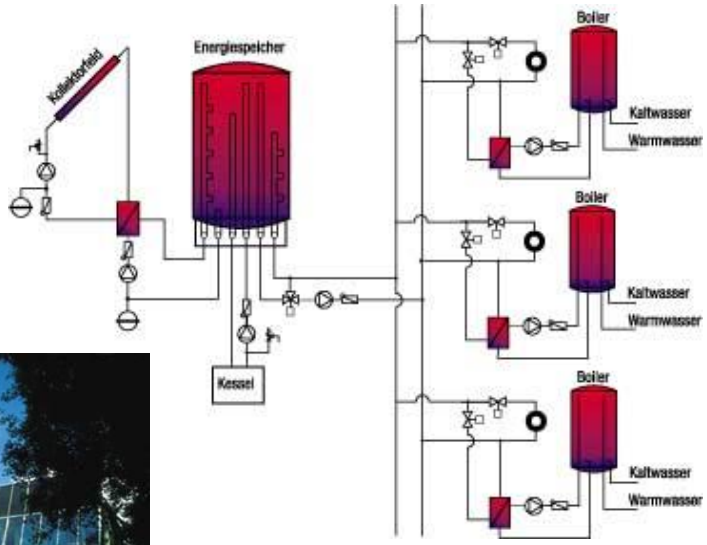

© Erneuerbare Energie

Large Scale Solar Heating Systems for Housing Developments, Austria

Bidirectional heating grid, BiNe2+ project, Austria

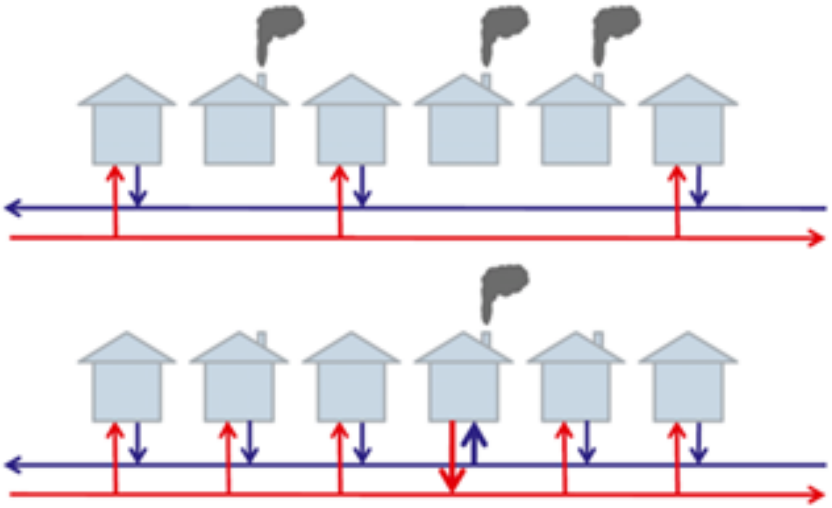

Ref. Lichtenegger, K. et al. 2016

Utility-scale applications and district heating and cooling networks

- Biogas and biomethane + intermittent generation in large-scale demonstration and close to the market in Germany
- Surplus wind power into H_2 to provide on demand:
  - Heat and power together with biogas
  - Mobility
- Ancillary services can be provided as virtual power plant

Enertrag hybrid power plant in Prenzlau, Germany

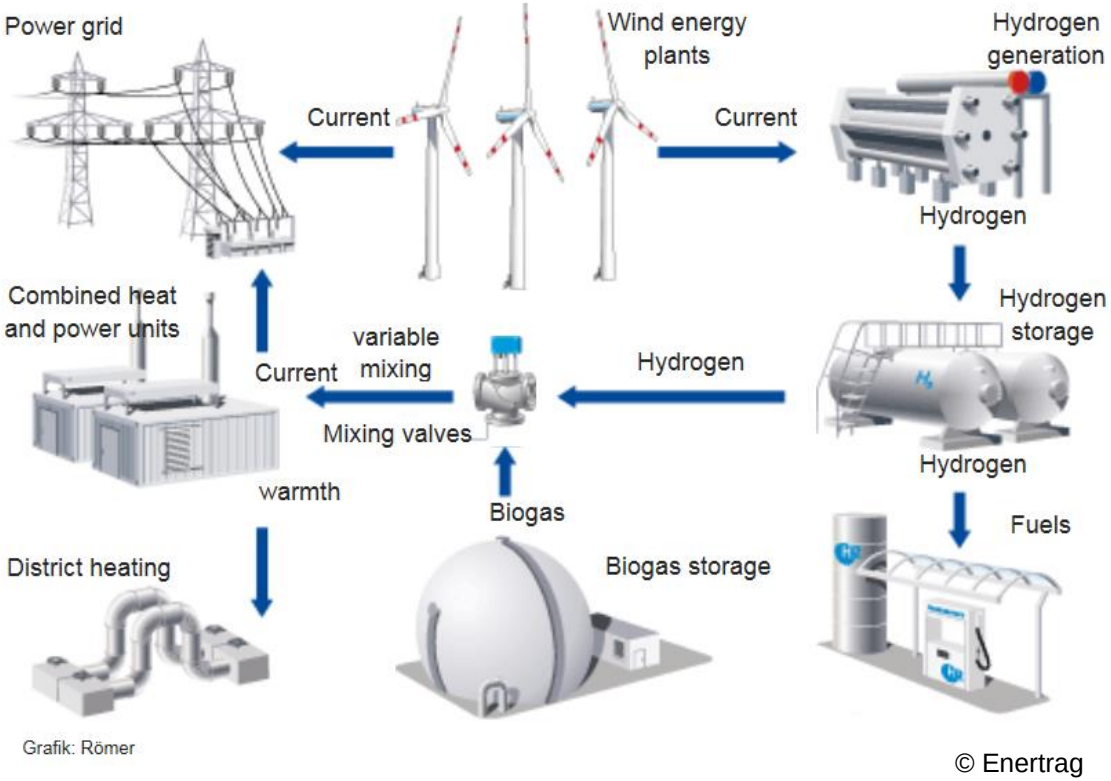

© Enertrag

Industrial applications

- Industrial heating and cooling
  - Bioenergy
  - Ground-source heat and waste heat recovery
  - Solar thermal (e.g. in breweries)
  - Solar PV
- Food and beverage industry
  - Animal by-products to biogas
- In Finland, oil replacement in heating sector
  - Key drivers self-sufficiency and cost-competitiveness
- In Germany, extensive demonstrations on Power-to-Gas concepts and virtual power plants

Großfurtner's slaughterhouse, Austria

© Grossfurtner

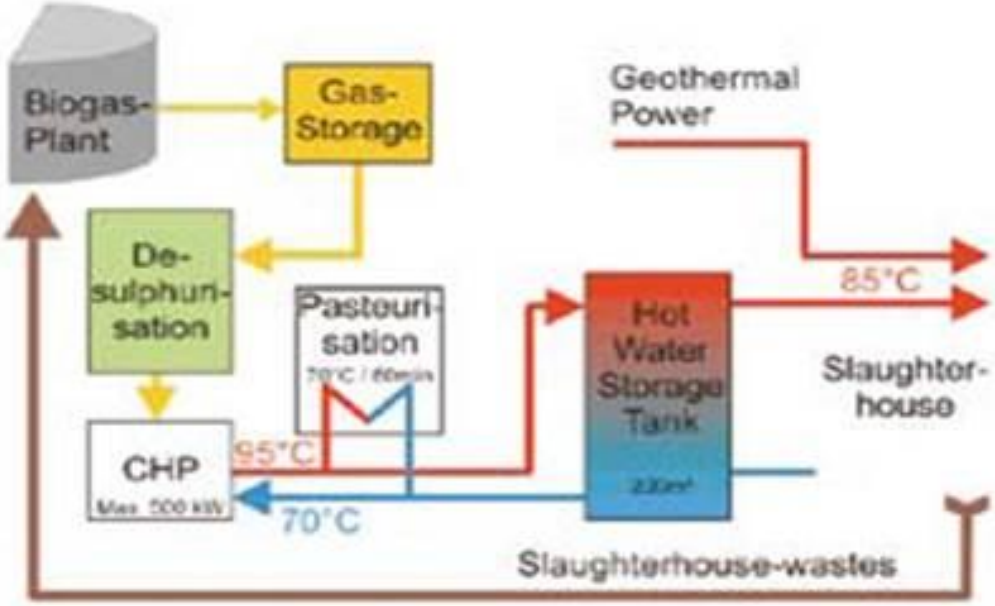

© IEA Bioenergy Task 37

Farm-scale applications

- High energy demand is a driver for higher level of self-sufficiency
- High RES and hybrid potential at farms
  - Direct energy consumption in agriculture in Finland ~10 TWh
  - Bioenergy a natural source of energy

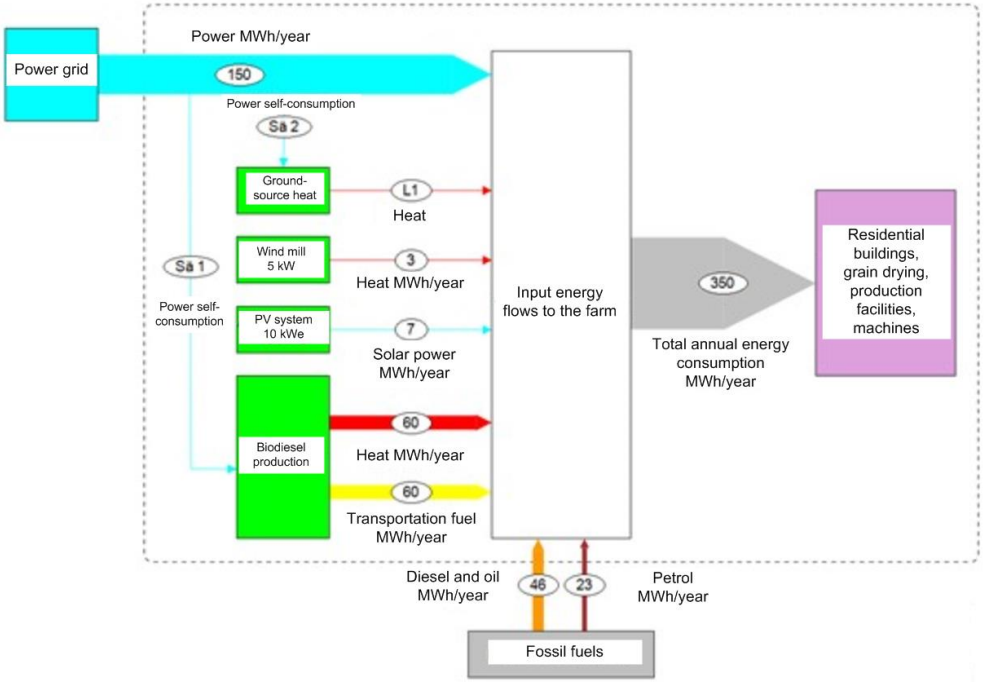

- Bridging of heat, power and transport sectors
- Challenge: to balance the heat production with demand
- New business models: Wood chip drying with excess heat

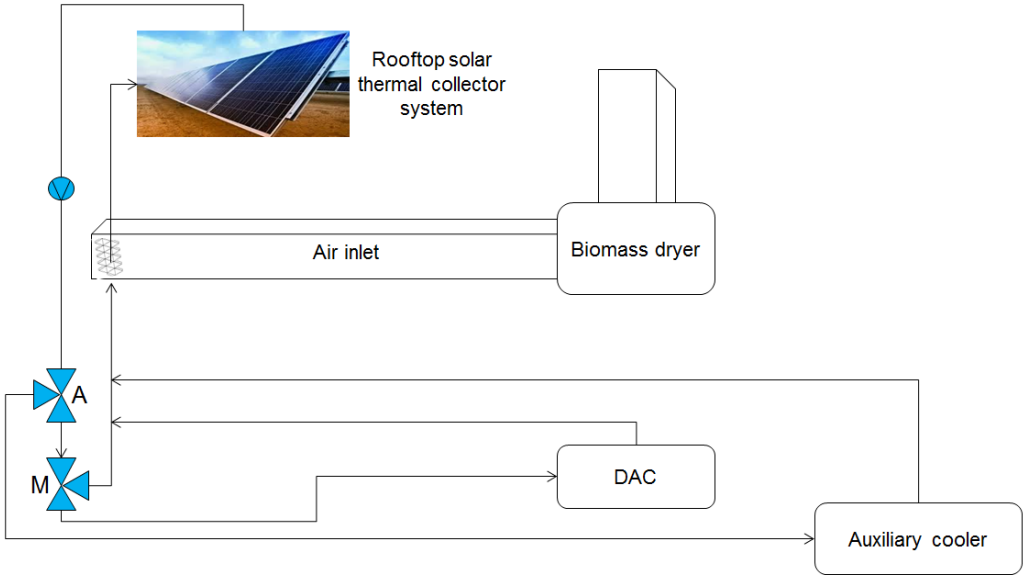

Summary

Summary of key findings

- Several case examples and good practices of hybrid system implementation were found
  - High deployment and potential in domestic applications
  - The main aim to use different heat sources at their best
- Technology base and technology providers for hybrids exist at all scales
  - Advanced controls & Profitable business cases
- Main drivers: self-sufficiency, reduction in energy costs, CO_2 cutting, reliability
- DH and DC grids have a potential for RES and hybrids
  - Bioenergy a fast way to increase the RES share and cut emissions
  - Heat pumps, solar thermal and geothermal to release bioenergy for other end-uses
- Most hybrids in the heating sector

  → More resources for transport sector
- Bioenergy as a balancing source (vs. base load)
  - Utilization of storable nature

TECHNOLOGY FOR BUSINESS

Country status reports & seminar presentations available at the project website:
http://task41project7.ieabioenergy.com

Elina.Hakkarainen@vtt.fi
+358 406 486 799

Summary of technology developments

	Domestic scale	Utility-scale and DH / DC networks	Industry	Farm-scale
On market/ Implemented	• Biomass + solar thermal • Biomass + ground-source heat • Biomass + waste heat recovery • Biomass + electric heating • Biomass + DH • Biomass + PV	• Biomass + waste heat recovery • Biomass + passive solar energy • Co-combustion of biomass and coal	• Biomass + ground-source heat • Biomass + waste heat recovery • Biomass + PV	• Biomass + ground-source heat • Biomass drying • Biomass + PV • Biomass + wind • Biogas production
Ongoing developments	• Two-way DH connection • Optimized control algorithms	• Biomass + solar thermal • Biomass + geothermal • Hydrogen boosted biofuels • Waste heat utilization from new sources • Low temperature grids • Prosumer integration	• Biogas related networks • Hydrogen boosted biofuels	• Biomass solar thermal • Liquid biofuel production